

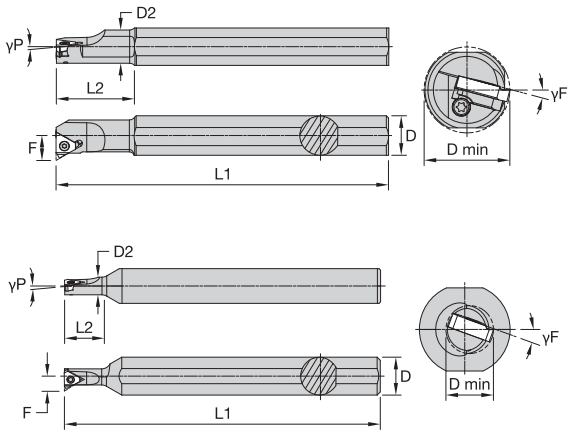

Laydown S-LSE

Steel Boring Bars • Inch

Order Number	ISO Catalog Number	D	D min	D2	F	L2	L1	γF°	γP°	Gage Insert
right hand										
7399122	S0308LSER12	.500	.250	.221	.172	.476	4.008	-20.0 deg	-2.5 deg	LT06NR
left hand										
7399121	S0308LSEL12	.500	.250	.221	.172	.504	4.008	-20.0 deg	-2.5 deg	LT06NL

NOTE: Items listed without a shim are designed for a 1.5° inclination angle.



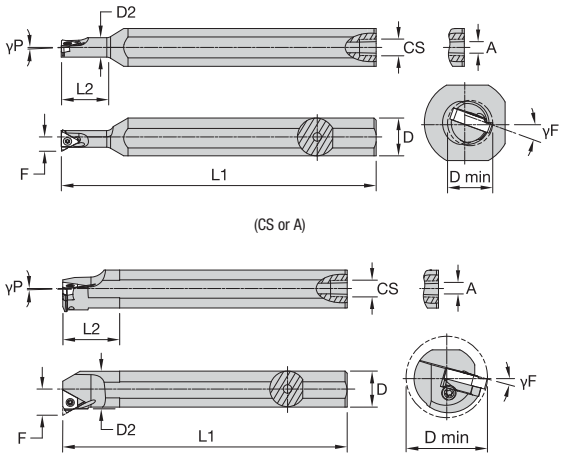

(CS or A)

Laydown A-LSE

Steel Boring Bars • Coolant Through • Inch

Order Number	ISO Catalog Number	D	D min	D2	F	L2	L1	A	γF°	γP°	Gage Insert
right hand											
7399124	A0410LSER15	.625	.310	.284	.207	.740	4.996	.118	-20.0 deg	-2.5 deg	LT08NR
7399129	A2020LSER5	1.250	1.551	1.236	.883	2.516	10.000	.315	-15.0 deg	-1.5 deg	LT27NR
7399130	A2424LSER5	1.500	1.799	1.484	1.005	2.350	12.000	.315	-15.0 deg	-1.5 deg	LT27NR
7399132	A3232LSER5	2.000	2.299	1.984	1.254	3.000	14.000	.315	-15.0 deg	-1.5 deg	LT27NR
7399134	A4040LSER5	2.500	2.800	2.484	1.486	2.949	16.000	.315	-15.0 deg	-1.5 deg	LT27NR
left hand											
7399123	A0410LSEL15	.625	.310	.284	.207	.740	4.996	.118	-20.0 deg	-2.5 deg	LT08NL



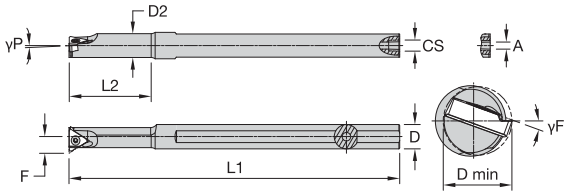

(CS or A)

Laydown E-LSE

Carbide Boring Bars • Coolant Through • Inch

Order Number	ISO Catalog Number	D	D min	D2	F	L2	L1	A	γF°	γP°	Gage Insert
right hand											
7399138	E0304LSER12	.250	.250	.244	.178	1.134	4.000	.039	-20.0 deg	-1.5 deg	LT06NR
7399140	E0405LSER15	.313	.310	.284	.207	1.221	5.000	.039	-20.0 deg	-2.5 deg	LT08NR
left hand											
7399137	E0304LSEL12	.250	.250	.244	.178	1.134	4.000	.039	-20.0 deg	-1.5 deg	LT06NL
7399139	E0405LSEL15	.313	.310	.284	.207	1.221	5.000	.039	-20.0 deg	-2.5 deg	LT08NL

LT KCU20B Threading

Application Data • Cutting Speeds

Material Group		KCU20B		
		min	start	max
P	P0	115	**150**	190
	P1	115	**150**	190
	P2	90	**135**	175
	P3	75	**130**	180
	P4	50	**100**	135
	P5	60	**95**	130
	P6	50	**90**	130
M	M1	40	**90**	140
	M2	60	**90**	120
	M3	60	**80**	100
K	K1	60	**95**	130
	K2	60	**100**	145
	K3	90	**125**	160
N	N1	100	**240**	365
	N2	200	**300**	400
	N3	60	**120**	180
	N4	80	**170**	255
	N5	70	**135**	195
	N6	100	**170**	245
	N7	80	**150**	225
S	S1	30	**45**	60
	S2	15	**20**	30
	S3	15	**20**	30
	S4	50	**110**	170
H	H1	45	**50**	60
	H2	40	**45**	50